MIL Circuit

DESCRIPTION

The MIL (Malfunction Indicator Lamp) is used to indicate vehicle malfunction detections by the ECM.
By turning the ignition switch to ON, power is supplied to the MIL circuit, and the ECM provides the circuit ground which illuminates the MIL.
The MIL operation can be checked visually: When the ignition switch is first turned to ON, the MIL should be illuminated and should then turn OFF. If the MIL remains illuminated or is not illuminated, conduct the following troubleshooting procedure using an intelligent tester or OBD II scan tool.

WIRING DIAGRAM

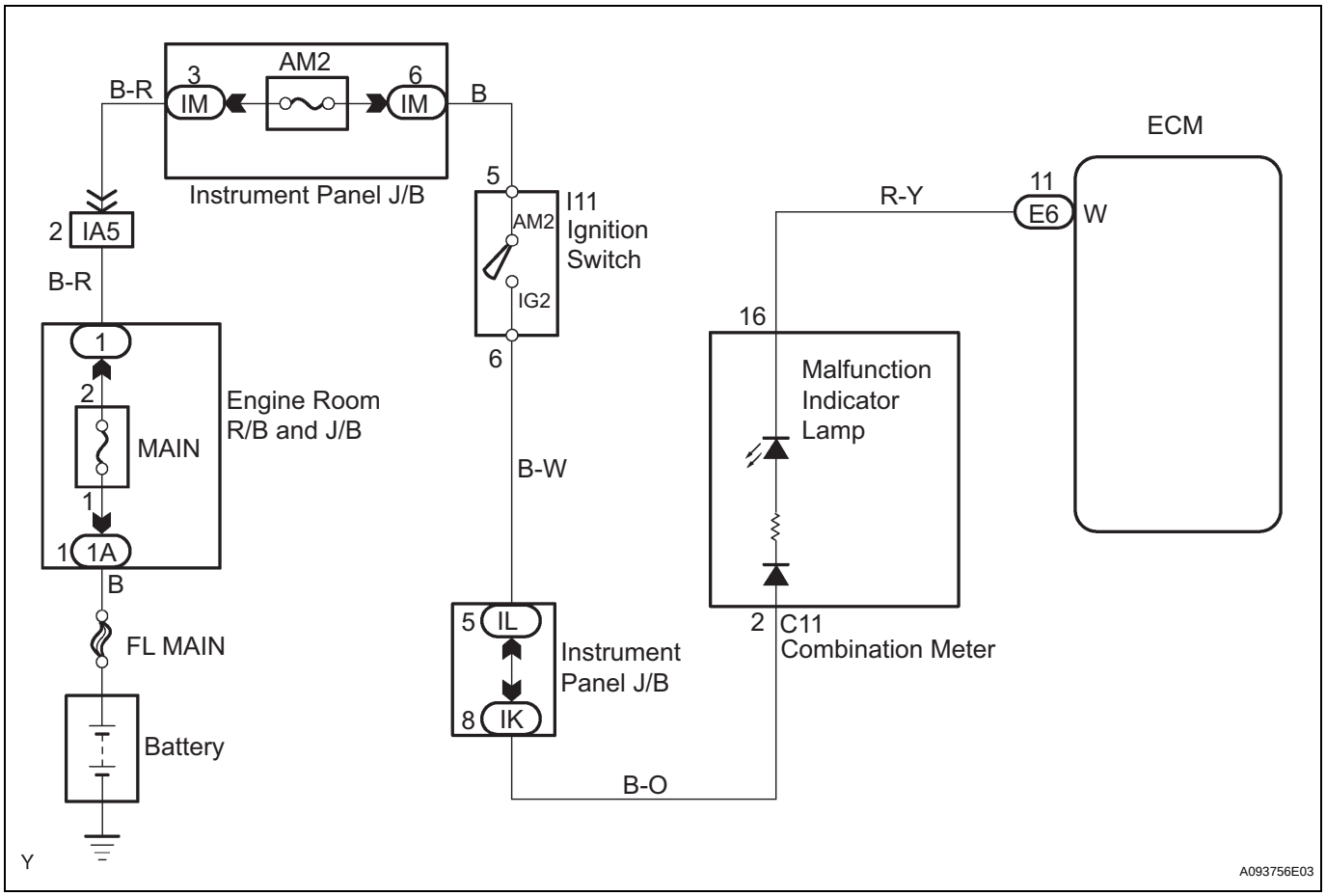

INSPECTION PROCEDURE

HINT:
Troubleshoot each trouble symptom in accordance with the table below.

MIL remains illuminated	Start inspection from step 1
MIL not illuminated	Start inspection from step 3

1	CHECK MIL CONDITION (WHETHER MIL TURNS OFF)

(a) Connect an intelligent tester or OBD II scan tool to the DLC3.
(b) Turn the ignition switch to ON.
(c) Turn the tester or scan tool ON.

(d) Check whether any DTCs have been stored (See page ES-30). Note them down if necessary.
(e) Clear DTCs (See page ES-30).
(f) Check if the MIL turns off.
OK:
MIL should turn off.

OK → **REPAIR CIRCUITS INDICATED BY OUTPUT DTCS**

NG

ES

2 CHECK HARNESS AND CONNECTOR (CHECK FOR SHORT IN WIRE HARNESS)

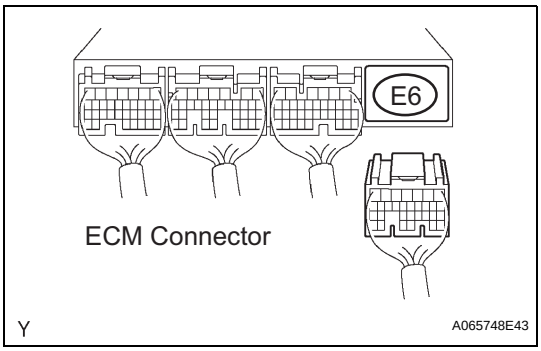

(a) Disconnect the E6 ECM connector.
(b) Turn the ignition switch to ON.
(c) Check that the MIL is not illuminated.
OK:
MIL is not illuminated
(d) Reconnect the ECM connector.

OK → **REPLACE ECM**

NG

CHECK AND REPLACE HARNESS AND CONNECTOR (COMBINATION METER - ECM)

3 CHECK MIL (MIL IS ILLUMINATED)

(a) Check if the MIL is illuminated when the ignition switch is turned to ON.
OK:
MIL should be illuminated.

OK → **SYSTEM IS OK**

NG

4 INSPECT COMBINATION METER ASSEMBLY (MIL CIRCUIT)

(a) See the combination meter troubleshooting procedure (See page ME-3).

NG → **CHECK AND REPAIR COMBINATION METER ASSEMBLY**

OK

CHECK AND REPAIR HARNESS AND CONNECTOR (COMBINATION METER - ECM)